知识产权声明:
本设计的结构和技术参数的知识产权归:
浙江赛煜电子科技有限公司 所有. 在未经
本公司书面许可, 不得复制, 转让或仿制.
如经发现被复制或仿制将受到法律的严惩.

因改良等原因，规格以及外观有所变更时，不再另行通知，敬请谅解。
Without further notice if specification and exterior have been changed because of improvement thanks for your understanding

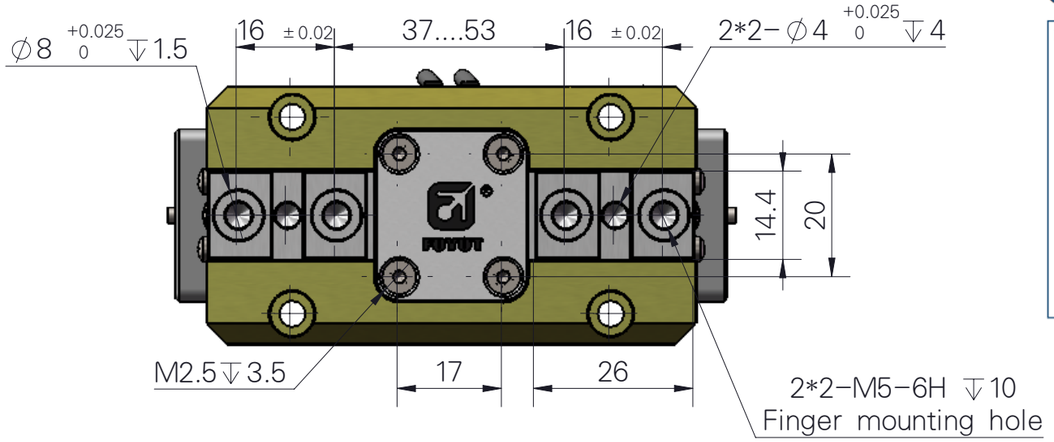

Gripping force, I.D. gripping

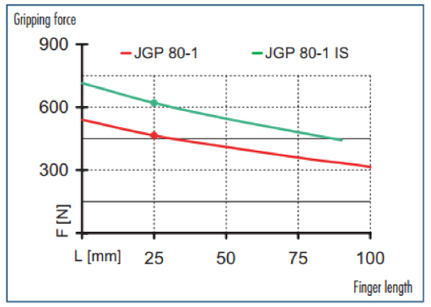

Gripping force, O.D. gripping

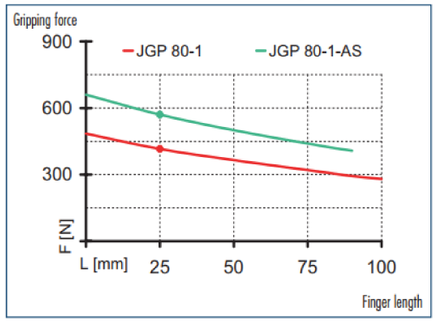

Maximum permitted finger offset

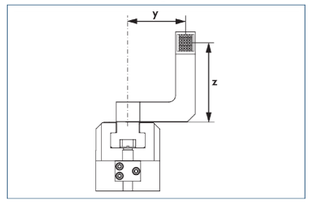

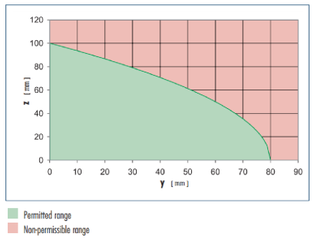

推荐的工件重量（Recommended workpiece weight）：2.1kg

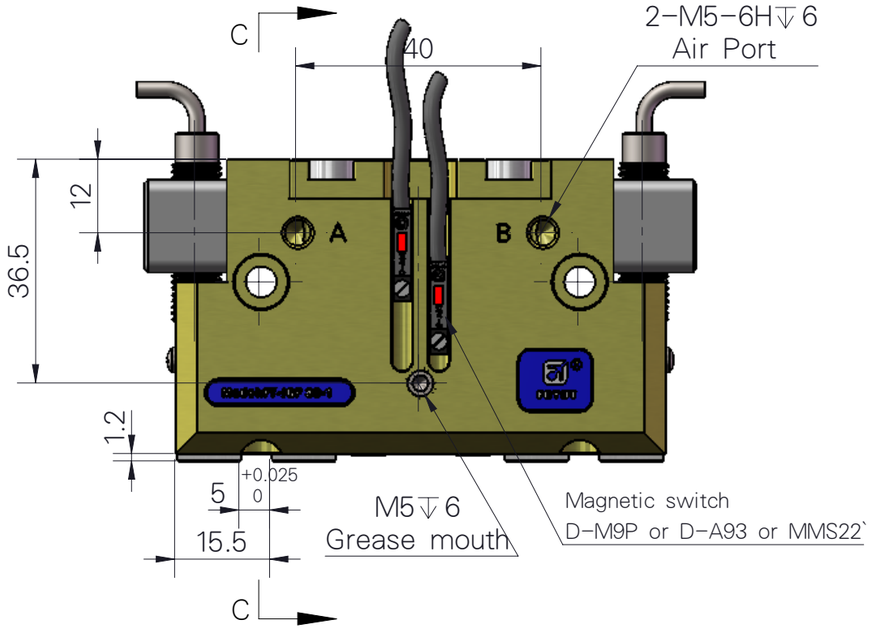

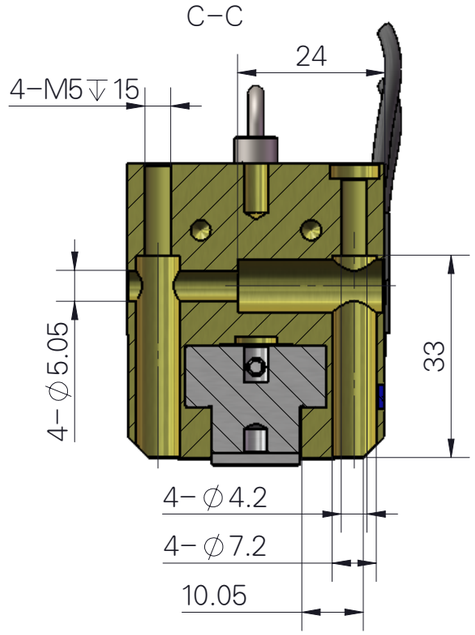

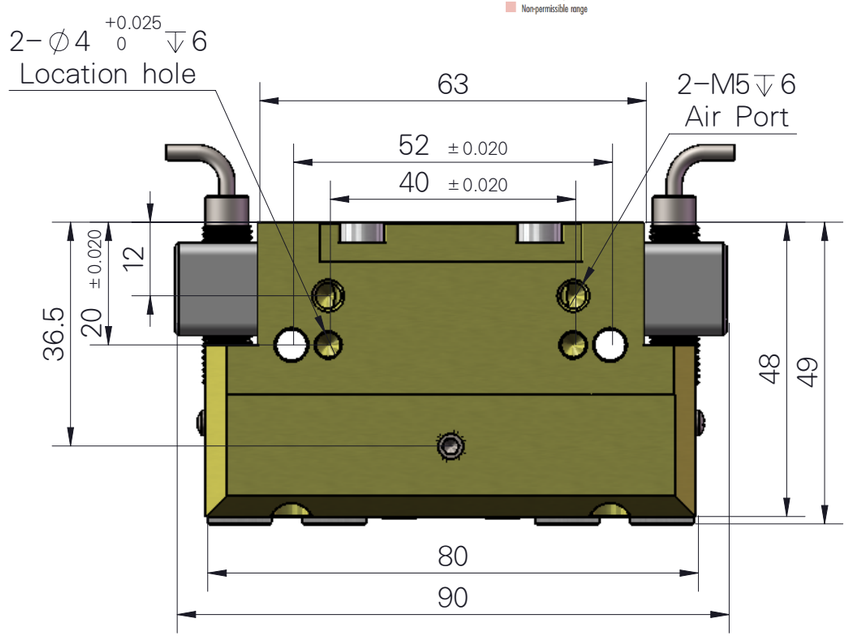

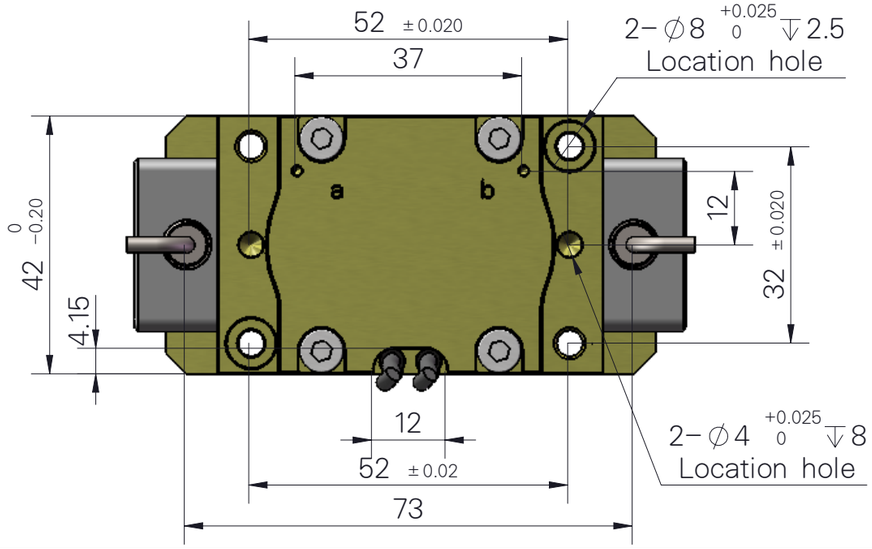

警告:
1.当操作夹爪工作时，请人员务必远离夹爪和机器人的活动部位，否则将会造成人身伤害的险;
2.由于不同物件有其不同的摩擦系数，当初次夹持工件时，请在空旷场地进行试夹，确保夹稳固后方可装机工作，否则将会有跌落工件砸伤机器或人员的风险
Warning:
1.When operating the gripper, please keep away from it Gripper and robot's moving parts, otherwise it will Risk of personal injury;
2. Because different objects have different friction coefficients, When clamping the workpiece for the first time, please try clamping in an open field. Ensure that the clamping is firm before the machine can work, otherwise it will There is a risk that falling workpieces may damage machines or personnel.

名称：气动平行两爪
Name：Pneumatic parallel two claws
型号（Model）：FY-JGP 80-1
P:空气压力（bar）P:Air Pressure(bar)
L:到作用点距离（mm）L:Exertion Length(mm)
开闭范围（Stoke）:16mm
产品重量（Weight):0.60kg
最大附件长度(Max. length attach):100mm
配管连接口(Fitting size):M5
理论夹持力-开(Gripping force :Open):465N
理论夹持力-闭(Gripping force : Close):415N
单循环空气消耗量(Air consumption per cycle):21cm³
开闭时间(Closeing/Opening time):0.02/0.02sec
重复精度Repeat accuracy):0.01mm
连续使用次数(Continuation usage amount):50
使用气压(Operating pressure):3-7bar
周围温度(Ambient temperature): -5 to 90℃(-10 to 130℃)
润滑(Lubrication):不需要（Needless）
根据IEC60529标准安全防护:IP40
Safety protection according to IEC60529 standard:IP40
所有数据在6Bar时测量(All data were measured at 6 Bar)
重复精度：连续动作100次以后的检测值
After 100 consecutive strokes to end positions